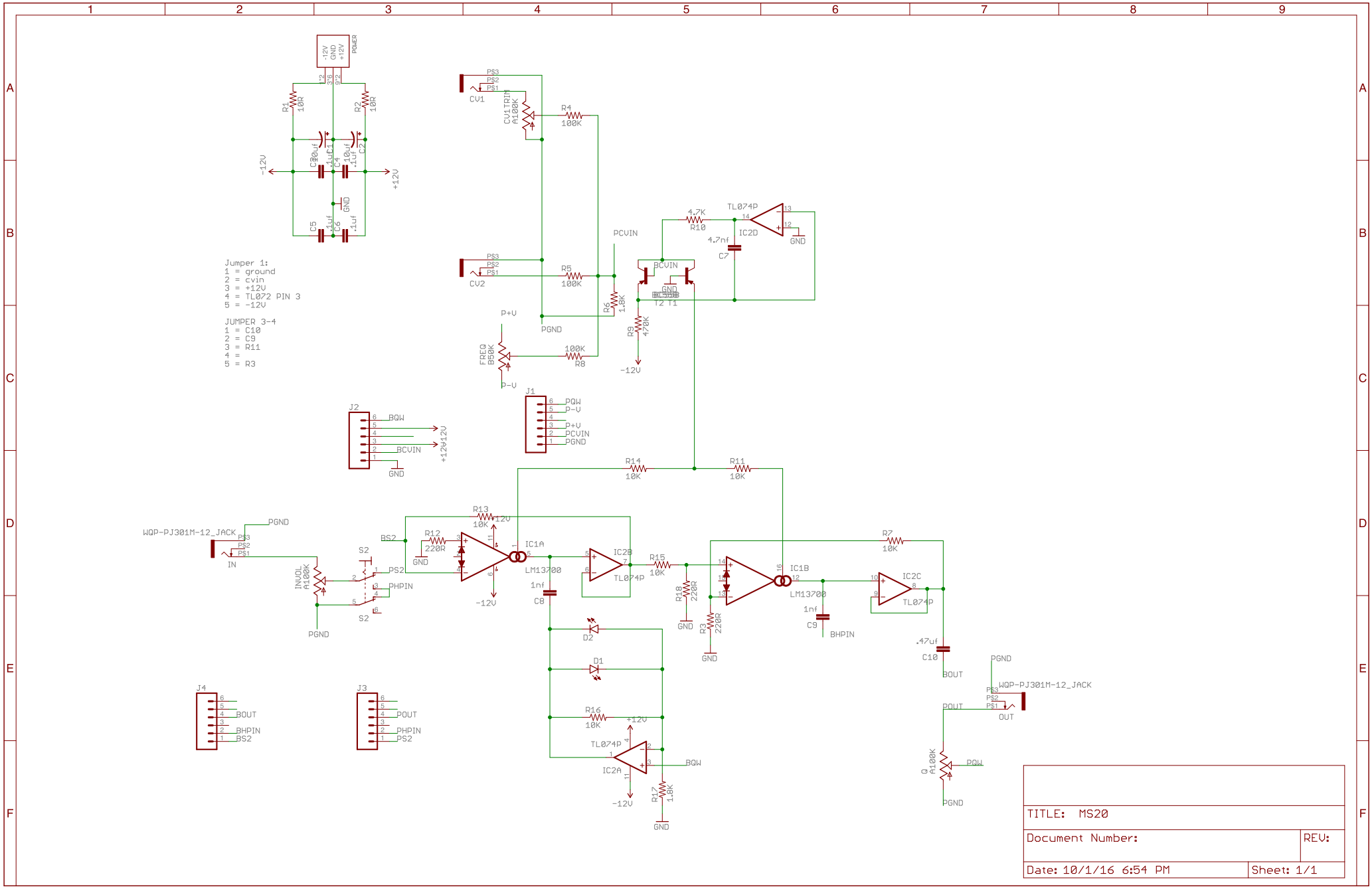

Jumper 1:
1 = ground
2 = cvin
3 = +12V
4 = TL072 PIN 3
5 = -12V
JUMPER 3-4
1 = C10
2 = C9
3 = R11
4 =
5 = R3
TITLE: MS20
Document Number:
REV:
Date: 10/1/16 6:54 PM
Sheet: 1/1