CUSTOMER'S NAME

ALPHA REFERENCE NO.

SPECIFICATION

PART NO.	ALPHA MODEL NAME

MODEL NAME
MODEL NO.

APPROVAL

PREPARED BY	REVIEWED BY	APPROVED BY

ALPHA

台灣艾華電子工業股份有限公司

桃園市中正路1221～1223號9樓

TAIWAN ALPHA ELECTRONIC CO., LTD.

9F,NO.1221,Chung Cheng Rd., Taoyuan, Taiwan, R.O.C.

Tel: 886-3-3577799 Fax: 886-3-3577700

EMAIL: sales@taiwanalpha.com.tw

URL: http//www.taiwanalpha.com

SLH-211-

THIRD ANGLE PROJECTION

SHAFT SHOWN IN
FULL C.C.W. POSITION

L=15

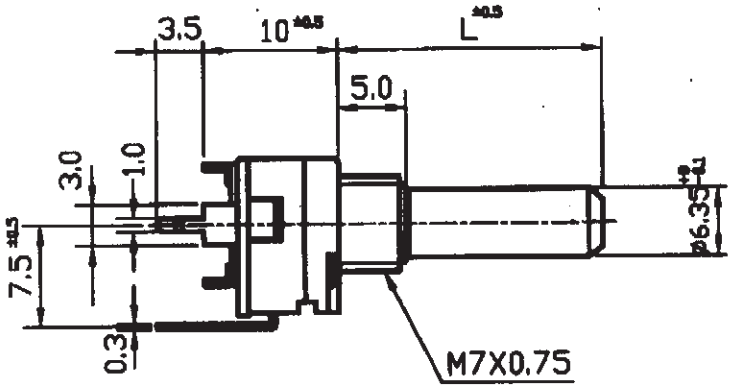

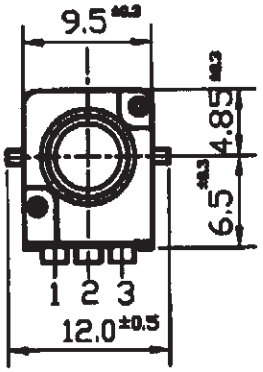

L	15		

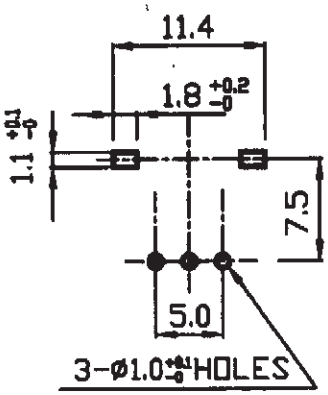

P.C.B. MOUNTING HOLE DETAIL

NUT 1PC
M7X0.75

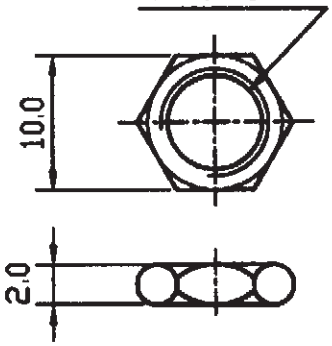

WASHER 1PC

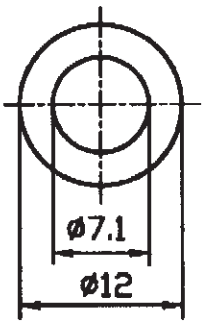

● 300° ROTATION
MONO UNIT

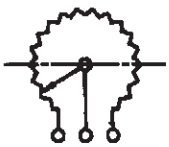

CIRCUIT

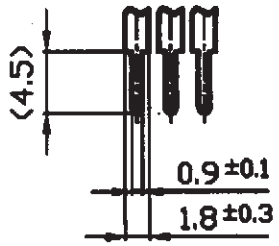

No.	DATE	DESCRIPTION	PART No.	NAME

TOL.UNLESS OTHERWISE STATED			DIMENSION	SCALE	DRAWN BY	CHECKED BY	APPROVED BY	DRAWING No.
less than	10	±0.3	mm	2:1				
above	10~30	±0.5						
above	30~100	±1.0						
above		±5°						

TAIWAN ALPHA ELECTRONIC CO., LTD.

9Ø 單軸單連迴轉型規格書
SPECIFICATIONS OF ROTARY POTENTIOMETER

一、電 氣 規 格：
Electrical characteristics：

1.1 全 阻 值：阻值適用範圍：1 KΩ- 500 KΩ（容許差±20%）
Overall resistance range：1 KΩ- 500 KΩ（Tolerance±20%）
（500Ω適用 B Taper） （500Ω B Taper Only）

1.2 額 定 功 率：B 特性 0.05W B 特性以外 0.02W
Power rating：B Taper 0.05W Except B Taper 0.02W

1.3 阻 抗 變 化 特 性 Taper：

阻抗變化特性 Taper	測定角度 Test point	端子 1-2 間輸出電壓 / 端子 1-3 間輸入電壓 V1-2 / V1-3 (%)	端子 2-3 間輸出電壓 / 端子 1-3 間輸入電壓 V2-3 / V1-3 (%)
A	150°	10-25	
B	150°	40-60	
C	*150°		10-25
D(10A)	150°	6-15	
X(10C)	*150°		6-15
E(25C)	*150°		18-34
K(25A)	150°	18-34	

(註) *記號表示自第三端子測起
*With respect to terminal 3

1.4 殘 留 阻 值：1-2 端子/2-3 端子同·
Residual resistance：1-2/2-3 Same

公稱阻抗值(KΩ) Overall resistance(KΩ)	殘留阻值 (Ω) Residual resistance(Ω)
R≦10	20 以下 20MAX
10<R≦50	30 以下 30MAX
50<R≦500	全阻值的 0.1% 以下 0.1% Max Of Total Resistance

1.5 轉 動 雜 音：依 J I S 測定法 100mV 以下·
Rotation noise（Refer to J I S）：100mV max.

1.6 絕 緣 阻 抗：D.C 250V 須在 100MΩ以上·
Insulation resistance：100MΩ min. At D.C 250 Volts

1.7 耐 電 壓：A.C 300V 可耐 1 分鐘以上·
Dielectric test：Units shall be designed to withstand 300 volts between resistance elements and case for a period of one minute without damage or arcing.

1.8 最 高 使 用 電 壓：A.C 50V（A.C 專用）·
Maximum operating voltage：50V A.C（A.C voltage only）

9Ø 單軸單連迴轉型規格書
SPECIFICATIONS OF ROTARY POTENTIOMETER

二、機 械 規 格：
Mechanical：

2.1 全 迴 轉 角 度：300±5 度
Total rotation angle：300±5°

2.2 回 轉 轉 矩：20~250gf-cm（迴轉速度 60 度 /1 秒）
Rotation torque：20~250gf-cm.（Rotational speed 60° /1 sec）

2.3 軸 鬆 動：固定腳銲錫後軸前端加上 250gf-cm 之力矩，於軸前端移動 0.8 ×L/20mm P-P 以內·
Play of shaft：The resistor shall be mounted by soldering the mounting legs on the panel ,and an end thrust of 250gf-cm at the end of the shaft shall be applied. Then the total play of the shaft shall not exceed 0.8xL/20mm P-P.

2.4 軸 擠 壓 引 張 強 度：在軸之方向加壓力或張力之靜負荷 10kgf,10 秒鐘無異常·
Axis push-pull strength：No damages with an application of push or pull force 10kgf for 10 sec.

2.5 軸 之 迴 轉 止 動 強 度：4kgf-cm 以上·
Shaft end stop strength：4kgf-cm min.

2.6 軸 承 螺 絲 固 定 強 度：7kgf-cm 以上·
Bushing mount strength：7kgf-cm min.

2.7 銲 錫 耐 熱 性 能：銲錫後,不可發生顯著之鬆動接觸不良·
Resistance to soldering heat：After soldering ,there shall be no evidence of poor contact between resistance element and terminals ,or any physical damages as a result of the test .

2.8 Click 位 置： 150 ± 5 度 （center click）
Click position： 150 ± 5 ° （center click）

2.9 Click 脫 出 力：30~250gf-cm（回轉速度 60° /1 秒）
Click torque：30~250gf-cm（Rotational 60° /1 sec）

2.10 Click 壽 命： 5,000 轉以上.
Click life： 5,000cycles min.

☆（2.8,2.9,2.10 僅適用於附 CLICK 時）
（2.8,2.9,2.10 IS USED FOR CLICK ONLY）

三、耐 久 性：
Reliability test ：

3.1 電 阻 體 迴 轉 壽 命 特 性：15,000 轉以上·（阻值 500Ω 5,000 回轉）
Rotational life：15,000 cycles min.
*（500Ω resistance shall be endurable with life test of more than 5,000 cycles.）

四、其 它 NOTE

4.1 依 照 J I S C－6 4 4 3 普通級碳素系可變電阻器·
Meet or exceed JIS C－6 4 4 3 Requirements .

4.2 使 用 溫 度： 10℃~+70℃
Operating temperature range: 10℃~+70℃

4.3 儲 存 溫 度：-20℃~+80℃
Storage temperature range：-20℃~+80℃

STANDARD RESISTANCE TAPER

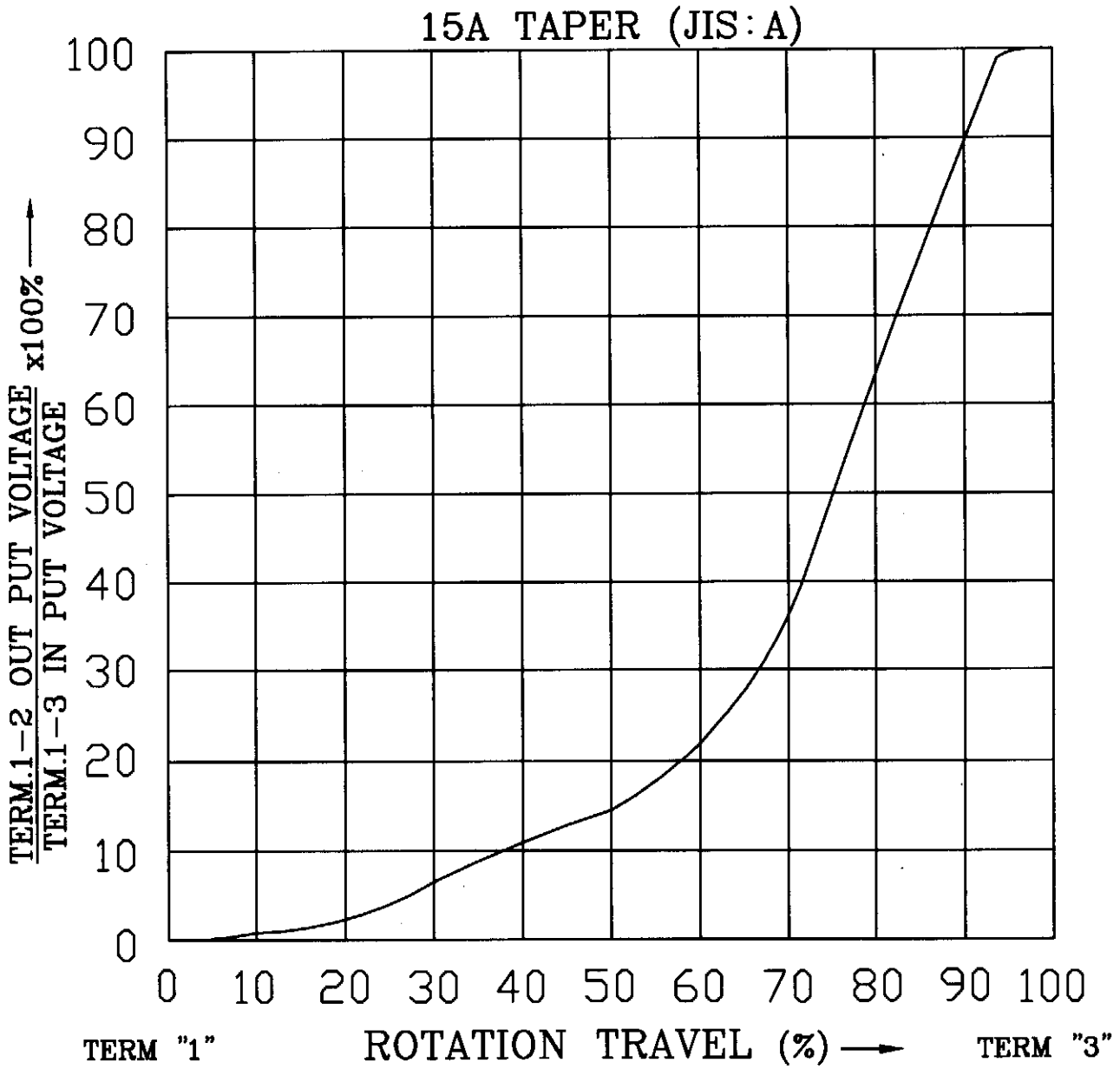

NO.	DATE	DESCRIPTION	MODEL NAME

TOL. UNLESS OTHERWISE STATED	DIMENSION	SCALE	DRAWN BY	CHECKED BY	APPROVED BY	DRAWING NO.
less than 10 ±0.3 above 10 ~ 30 ±0.5 above 30 ~100 ±1.0 above ±0°	mm		何 90.8.21 建志	王 90.8.21 茂松	王 90.8.21 茂松	

TAIWAN ALPHA ELECTRONIC CO., LTD.

可變電阻無鉛焊錫與保管條件共通規格書

Common Specification of Lead-Free Soldering and Storage conditions for Potentiometers

以下焊錫條件以可變電阻置於單層 1.6mm 厚度之印刷電路板上測試爲基準.

The specification below is based on testing results of 1.6mm thickness single layer printed circuit board.

1. 手工焊錫條件 :

   For Manual Soldering :

   1-1 操作溫度最高 350°C，操作時間 3 秒以內。

   To be performed within 3 seconds at 350°C or below.

2. 自動或半自動機台焊錫條件：

   For Automated or Semi-Automated Soldering Equipments:

   2-1 使用發泡式且比重 0.82 以上的助焊劑，發泡高度以印刷電路板厚度一半爲標準，且助劑不能流入可變電阻基板表面及印刷電路板表面。

   Flux of 0.82 specific gravity, applied by foam fluxer, shall be used. Foam head shall be limited to the height which is half thickness of printed circuit board to be soldered. No flux should be allowed to run up onto resistive element board of potentiometer and the surface of printed circuit board.

   2-2 預熱時間不超過兩分鐘，焊錫接面 (即印刷電路板底) 最高預熱溫度不超過 100°C。

   Regarding preheating, the entire flow duration should not exceed 2 minutes, and soldering surface temperature (undersurface of PCB) shall be settled within 100°C.

   2-3 焊錫過程機台設定溫度在 260°C 以下、 4 秒以內。

   Solder Dipping is to be performed within 4 seconds at 260°C or below.

3. 若回轉型電位器是塑膠軸且帶有檔位，請將主軸先調整至其中一個檔位或中心檔位上才可以進行焊錫作業。

   For rotary potentiometer with plastic shaft which have centre detent or multiple detents, the shaft should be settled in relevant detent position prior to soldering process.

4. 手工焊錫、自動或半自動機台焊錫不得超過一回。

   Regardless of soldering facility and method, solder dipping or solder smearing must not be carried out more than 1 time.

註: 本項焊錫溫度條件不適用於回流焊接作業設備。

Remarks: This specification is not recommended for and applicable in reflow soldering.

焊錫注意事項:

Caution for soldering:

如圖所示，請避免 PCB 上層表面有焊錫

Please avoid soldering on upper surface of P.C.B. as shown.

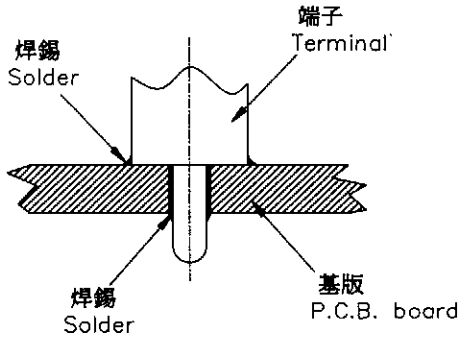

5. 保管條件(Storage conditions):

   產品需儲存在原始的包裝,以及保持常溫常濕、避免陽光直射、遠離任何腐蝕性氣體.

   產品需盡快完全地使用完,建議最慢不要超過交貨後 6 個月. 產品經拆封後, 全部的數量都需迅速地使用完.

   The products shall be stored in the original packaging and kept at room temperature and humidity, out of direct sunlight, and away from any and all corrosive gas. The products shall be completely used as soon as possible, but no longer than 6 months from the date of delivery. Once product packaging is opened, the complete quantity of such products shall be promptly used.